USER MANUAL
BLUE EVOLUTION XL+

MANUFACTURER	beam GmbH
FROM SERIAL NUMBER	21/100001
VERSION	101
ISSUE DATE	17.11.2022
ADDRESS	Illertalstraße 3 DE 89281 Altenstadt info@beam.de +49 8337 7400-0
MANAGING DIRECTOR	Robert Wiedemann Marco Wiedemann

EDITING & VISUALISATION

Manual pilot

Arrange a consultation:
+49 176 61370152
https://www.manualpilot.de/

© Copyright by beam

Foreword

Thank you for trusting beam GmbH.

This user manual contains safety instructions, relevant information and assistance in handling the **beam Blue Evolution XL+ Touch**.
It offers support to familiarise with, maintain and care for the device.
Follow this user manual to ensure a long service life and reliable operation of the device.
This user manual is part of the device.
Make sure that this manual is always accessible.

Read this user manual in full before using the device for the first time and re-read it regularly.
Make sure that every user of this device knows and implements the user manual.

Some graphic representations may differ from your device.
For better representation, components have been removed or modified in some graphics.

The claim of the company beam GmbH is to always provide the best product for its customers.
It is therefore possible that changes and improvements made after this manual was published are not included.
The latest version of your user manual is available online at https://www.dampfsauger-beam.de/startseite/
If you need further information or help, the beam service centre is at your disposal.

Amendments and Copyright

Due to constantly new technical developments, beam GmbH reserves the right to make changes without prior notice.

Copyright 2021
All content, in particular texts, photographs and graphics are protected by copyright. beam GmbH reserves all rights including duplication, publication, processing and translation.

Please note

To make reading easier, the masculine form is used in this user manual for personal designations and gender-related nouns. Corresponding terms generally apply to all genders in terms of equal treatment. The shortened and consistent form of expression is solely for editorial purposes and implies neither opinion nor judgement.

Feedback form

In order to guarantee you a high level of user-friendliness, we are always working on our products and manuals. For this, we need your support.

We would be very happy to receive your feedback.

Simply copy or scan this page and send it to the contact details below.

Contact

beam GmbH
Illertalstraße 3
DE 89281 Altenstadt
info@beam.de

Feedback

Assessment

In general, how would you rate this manual?

★★★★★ ○ Excellent
★★★★ ○ Very good
★★★ ○ Good
★★ ○ Decent
★ ○ Poor

Your data

Company
Name
Address

Phone number
E-mail address

Thank you for your help.

© Copyright by beam

1 Product description 6

1.1 Complete overview of the basic device 6
1.2 Technical Specifications 7
1.3 Declaration of Conformity 8

2 Security 9

2.1 Legend of warnings 9
2.2 Legend of symbols 10
2.3 Warnings 10
2.4 Operating conditions 11
2.5 Storage conditions 11
2.6 Description of user and specialist 11
2.6.1 Personal protective equipment 11
2.6.2 User 12
2.6.3 Specialist 12
2.6.4 Operator 12
2.6.5 Intended use 12
2.6.6 Foreseeable Misuse 12
2.6.7 Disposal 13

3 Service and operation 13

3.1 Updates and Changes 13
3.2 Prepare device 13
3.2.1 Install support arms with handle 14
3.2.2 Assemble the accessory box 15

3.3 Commissioning 16
3.3.1 Establish power supply 16
3.3.2 Fill the storage tank and hot water module 17
3.3.2.1 Fill storage tank 17
3.3.2.2 Fill hot water module 17
3.3.3 Filter tank 18
3.3.3.1 Remove filter tank 19
3.3.3.2 Remove filter cover 19
3.3.3.3 Fill filter tank 19
3.3.3.4 Insert filter tank 20
3.3.4 Steam and suction hose 20
3.3.4.1 Connect steam and suction hose 21
3.3.4.2 Remove steam and suction hose 21
3.3.5 Accessories 21
3.3.5.1 Accessories on hand control unit 22
3.3.5.2 Accessories on extraction nozzle wide 23
3.3.5.3 Accessory on extraction nozzle narrow 24
3.3.5.4 Accessories on floor nozzle 25
3.3.5.5 Accessories on point jet nozzle 27

3.4 Operation 29
3.4.1 Turn on the device 29
3.4.2 Display 30
3.4.2.1 Overview display 30

3.4.3 Functions 31
3.4.4 Activate the steam function 31
3.4.4.1 Deactivate the steam function 32
3.4.5 Activate the hot water function 33
3.4.5.1 Deactivate the hot water function 34
3.4.6 Activate the suction function 34
3.4.6.1 Deactivate suction function 35

3.5 Decommissioning 36
3.5.1 Prepare for decommissioning 36
3.5.2 Clean attachments 36
3.5.2.1 Clean steam and suction hose and accessories 36
3.5.2.2 Clean the filter tank 37
3.5.3 Storage 37

3.6 Malfunctions 38
3.6.1 Error codes on display 38
3.6.1.1 Error codes 38
3.6.2 Malfunctions 39
3.6.3 Safety precautions 39

4 Maintenance 41

4.1 Document maintenance 41
4.2 Hot water module 42
4.2.1 Prepare hot water module for maintenance 42
4.2.1.1 Empty the hot water module 42
4.2.2 Rinse the hot water module 42

4.3 Boiler 44
4.3.1 Prepare boiler maintenance 44
4.3.1.1 Empty storage tank 44
4.3.2 Descale the boiler 45
4.3.2.1 Start cleaning the boiler 46
4.3.2.2 Empty the boiler 47
4.3.2.3 Rinse the boiler 48

4.4 Filters and o-rings 49
4.4.1 Maintenance of filters 49
4.4.2 Maintenance of O-rings 49
4.4.2.1 Change O-rings on hand control unit 50
4.4.2.2 Change the O-rings on the suction and steam hose 50
4.4.2.3 Change O-rings on the extension tube 51

© Copyright by beam

1 Product description

1.1 Complete overview of the basic device

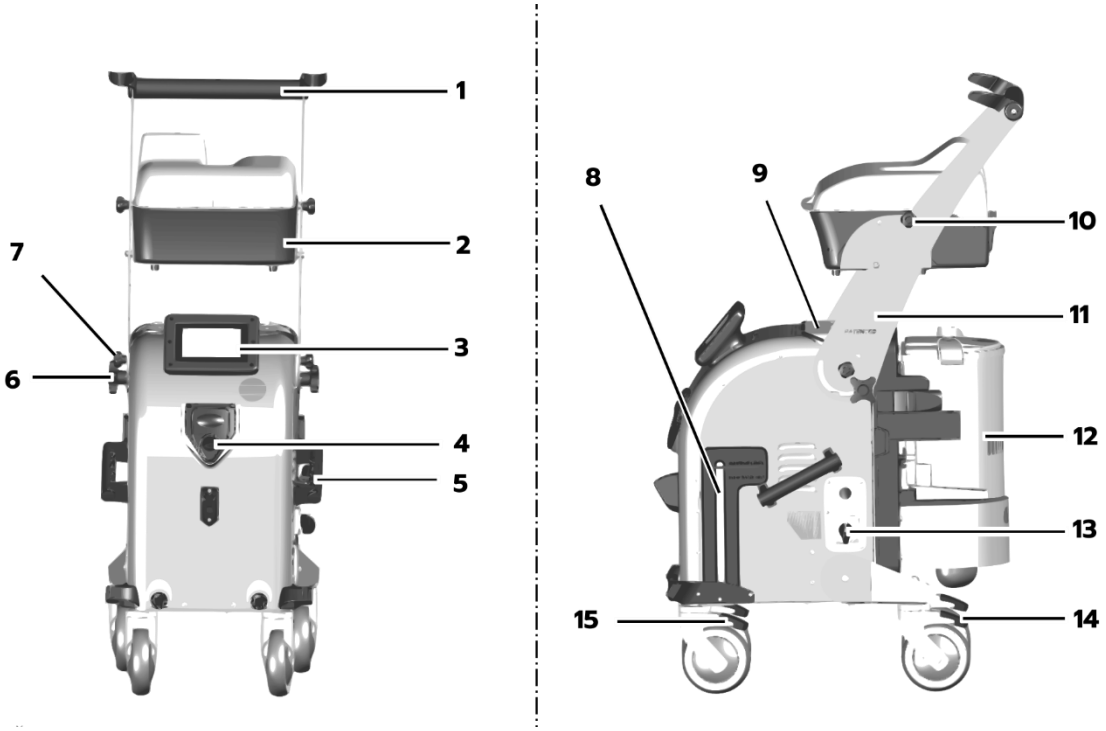

Figure 1.1-1 Complete overview of the basic device

1	Handle
2	Accessory box
3	Display
4	Hose connection
5	Carrying handle (both sides)
6	Star nuts carrier arm (both sides)
7	Star nuts small (on both sides)
8	Filling level indicator
9	Filling openings cover
10	Star nut accessory box (both sides)
11	Support arm (both sides)
12	Filter tank
13	Main switch
14	Directional lock rear wheel (both sides)
15	Parking brake front wheel (both sides)

1.2 Technical Specifications

Name	Unit	Value (including tolerance)
Nominal voltage	V in AC	380-400
	Hz	50/60
Overall performance	W	7200
Nominal consumption of stainless steel boiler per heating element	W	2000
Nominal input of engine	W	1200
Noise development	dB	71
Automatic refill system (optional)	l	Approx 3.0
Maximal steam temperature	°C	180
Maximal pressure steam	bar	10
Unterdruck (Wassersäule)	mm H2O	2100
Maximal capacity of the water filter	l	4
Water volume Water filter between minimal and maximal range	l	2
Steam and suction hose	m	3.2
Device length	mm	720
Device width	mm	390
Device height	mm	930
Device weight	kg	45

Table 1.2–1 Technical Specifications

© Copyright by beam

1.3 Declaration of Conformity

EG-Konformitätserklärung CE
CE *DECLARATION OF CONFORMITY*

Der Unterzeichnende, Geschäftsführer der:
The undersigned, representative of the following manufacturer

beam GmbH
Illertalstr. 3, 89281 Altenstadt

Erklärt, dass das Produkt:
DECLARES that the product:

Beschreibung *Description*	DAMPFSAUGER STEAM AND VACUUM CLEANER
Modell *Model*	BLUE EVOLUTION XL+

den folgenden Richtlinien entspricht:
- **Directive 2014/30/UE (EMC Richtlinie)**
- **Directive 2006/42/CE (Maschinen Richtlinie)**
- **Directive 2011/65/UE (RoHS)**

is in accordance with the following Directives:
- ***2014/30 EU Directive (EMC Directive)***
- ***2006/42 EC Directive (Machinery Directive)***
- ***2011/65/UE RoHS Directive***

Und dass folgende Normen angewandt wurden:
and that all the following standards have been applied

EN 60335-2-69:2012, EN 60335-2-79:2012
eingesetzt in Verbindung mit EN 60335-1:2012/A14:2019
EN 62233 :2008

used in conjunction with EN 60335-1:2012/A14:2019
EN 62233 :2008
EN 55014-1 :2017
EN 55014-2 :2015
EN 61000-3-2 :2019
EN 61000-3-3 :2013/A1 :2019

Die letzten beiden Ziffern des Jahres, indem die CE Kennzeichung angebracht wurde '20
Last two figures of the year of the CE marking

Ort Altenstadt
Place

Datum 12.06.2020
Date

Firma
Sign

Robert Wiedemann (Geschäftsführer)

1/1

Figure 1.3-1 Declaration of Conformity

2 Security

2.1 Legend of warnings

This warning sign warns of possible dangers.
To avoid death, injury and damage, follow all measures marked with this warning sign without exception.

The level of danger differs as follows:

DANGER

Serious injuries or danger to life!

The keyword “Danger” indicates an imminent situation which, if not avoided, will result in serious bodily injury or death.

WARNING

Serious injuries or danger to life possible!

Warning keyword indicates a situation which, if not avoided, could result in death or serious injury.

CAUTION

Minor or medium bodily injuries!

The keyword “caution” indicates a situation that will result in minor or moderate physical injury if not avoided.

ATTENTION

Damage!

The keyword “Attention” indicates a situation that will result in property damage, if not avoided.

© Copyright by beam

2.2 Legend of symbols

Symbol	Function
■	**Prerequisite for action** Shows conditions for subsequent actions.
➔	**Call to Action** Prompts the operator for an action
⇨	**Action result** Shows the result of a previous action.
–	**Count** Structures several points of a list.

Table 2.2–1 Legend of symbols

INFO

Displays useful and helpful information or tips and recommendations.

2.3 Warnings

WARNING

Power supply defect!

Risk of death.

➔ Make sure that the power supply of the device is free of defects before each start-up.
➔ Touch the device and network connector with dry hands only.

WARNING

Improper handling of electronic devices!

Risk of death.

➔ Ensure that electrical devices are voltage-free before cleaning.
➔ Ensure that electrical devices to be cleaned are not damaged.

CAUTION

Improper handling of the UV-C lamp!

Eye and skin injuries.

➔ Avoid looking directly into the UV-C lamp.
➔ Only have the UV-C lamp replaced by authorised specialist personnel.

When the UV-C lamp is removed:

➔ Secure the device against switching on.

CAUTION

Improper handling!

Burns, injuries and property damage.

➔ Ensure that all unauthorised persons leave the work area.
➔ Direct the steam jet exclusively at the surfaces to be cleaned.
➔ Ensure that people and animals are protected from the steam jet.
➔ Make sure that the device is switched on and is supervised.
➔ Ensure that the device is secured against unauthorised use.
➔ Ensure that repair work on the device is carried out by authorised specialist personnel only.
➔ Only perform maintenance activities described in this manual.
➔ Ensure that the device remains technically unchanged.

CAUTION

Defective components!

Injuries.

➔ Check the device for proper condition before each use.

If the device has defects:

➔ Leave the status of the device unchanged.
➔ Contact beam service centre.

2.4 Operating conditions

Operate the device under the following conditions:

– Below normal ambient temperature
– In an environment protected from rain and frost
– On flat and cool ground
– At a sufficient distance from heat sources

2.5 Storage conditions

Store the device under the following conditions:

– Freeze-proof environment
– Dry environment
– With separate power supply

2.6 Description of user and specialist

2.6.1 Personal protective equipment

The personal protective equipment consists of the following components:

– Appropriate clothing

© Copyright by beam

2.6.2 User

Definition and responsibilities of the user:
- Is of legal age.
- Follows this user guide.
- Works with the device.
- Fills and refills fluids for work.
- Cleans and maintains the device.
- Performs the maintenance activities described.
- Before use, ensures that the device is in working order.
- Reports defects to the operator or directly to beam GmbH.

2.6.3 Specialist

Definition and responsibilities of the specialist:
- Follows this user guide.
- Repairs the device.
- Repairs and documents defects.
- Has the necessary qualification to carry out repairs.
- Is authorised by beam GmbH.

2.6.4 Operator

Definition and responsibilities of the operator:
- Makes the device available for work.
- Ensures that this manual is always accessible.
- Ensures that the operator knows and implements the user manual.
- Provides additional protective equipment that may be required.
- Ensures that maintenance and care intervals are followed.

2.6.5 Intended use

The beam Blue Evolution XL+ Touch is used for the environmentally friendly cleaning of a wide variety of materials and surfaces with clear water.

To ensure proper use, comply with the following points:
- Follow the user manual
- Carry out maintenance work
- Carry out servicing activities

2.6.6 Foreseeable Misuse

Use of the device is prohibited for the following purposes:
- to heat various objects or materials
- to clean skin, hair, people or animals
- to hit
- to leverage
- to scratch
- to pick up explosive or flammable substances
- to clean live components
- to clean moisture-sensitive electronic devices
- to clean materials containing asbestos
- to clean materials harmful to health

2.6.7 Disposal

Dispose of the device and device components as follows:

- Ensure that individual components are properly disposed of at the end of their useful life.
- Ensure that the device is properly disposed of at the end of its useful life.
- Ensure that country-specific waste regulation guidelines are complied with.
- Ensure that all consumables are removed prior to disposal.

3 Service and operation

3.1 Updates and Changes

Update and change	Chapter	Link

Table 3.1–1 Updates and Changes

3.2 Prepare device

CAUTION

Improper lifting of the device!

Injuries.

➔ Make sure your back and spine are protected when lifting.

➔ If necessary, get a second person to help.

© Copyright by beam

3.2.1 Install support arms with handle

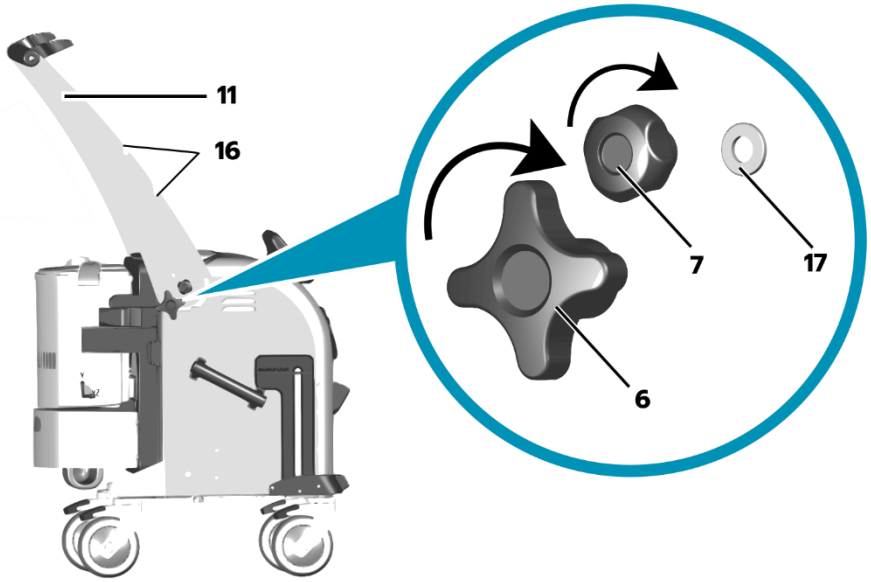

Figure 3.2-1 Assemble the support arms and handle

6	Star nuts carrier arm (both sides)	**16**	Hanging grooves (on both sides)
7	Star nuts small (on both sides)	**17**	Washers (on both sides)
11	Carrier arm		

Ensure that the following components are available:

- Star nuts support arm **6**
- Small star nuts **7**
- Support arm **11**
- Washers **17**

➔ If necessary, get a second person to help.

➔ Position support arm **11**.

⇨ Hanging grooves **16** point in the direction of the display.

➔ Attach small star nuts **7** and washers **17** on both sides.

➔ Ensure that the washers **17** are in direct contact with the small star nuts **7**.

➔ Tighten small star nuts **7**.

➔ Tighten support arm star nuts **6** on both sides.

➔ Tighten star nuts **6** and star nuts **7**.

⇨ Support arm with handle is installed.

3.2.2 Assemble the accessory box

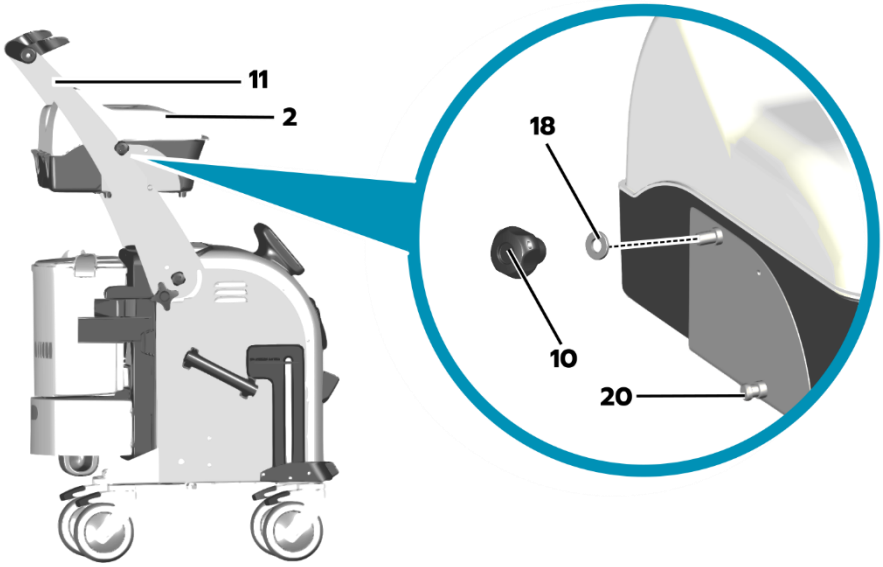

Figure 3.2-2 Assemble the accessory box

2	Accessory box	**18**	Washers (on both sides)
10	Star nut accessory box (both sides)	**20**	Pegs
11	Carrier arm		

Ensure that the following components are available:

- Accessory box **2**
- Star nut accessory box **10**
- Washers **18**

➔ Hang the accessory box **2** with pin **20** on the support arm **11**.
➔ Tilt accessory box **2** up as far as it will go.
➔ Screw on star nut accessory box **10** and washers **18** on both sides.
➔ Ensure that washers **18** are in direct contact with star nuts in accessory box **10**.
➔ Tighten the star nuts in accessory box **10**.
⇨ Accessory box **2** is assembled.

© Copyright by beam

3.3 Commissioning

3.3.1 Establish power supply

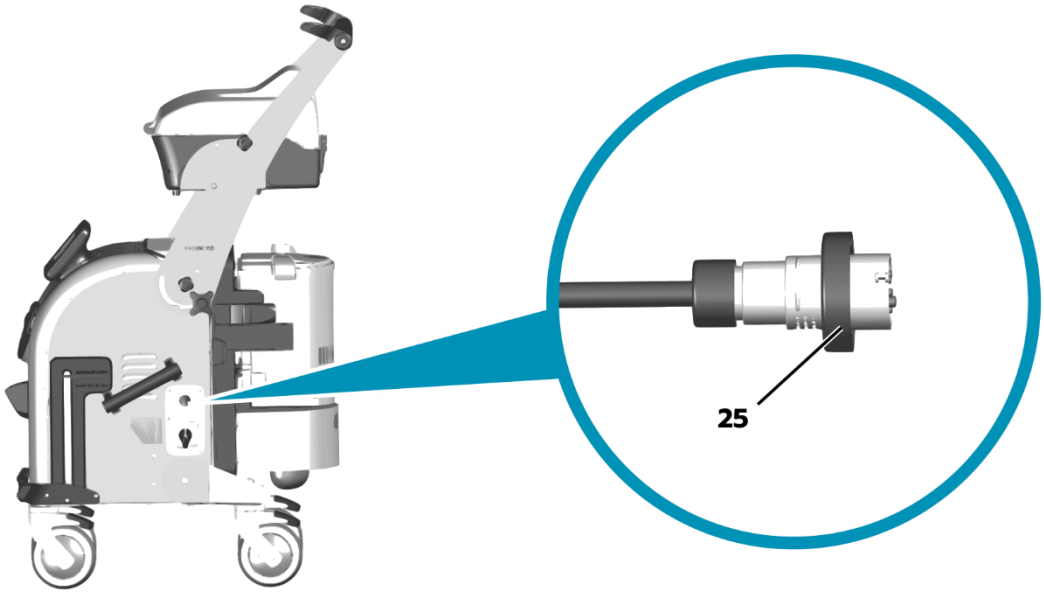

Figure 3.3-1 Establish power supply

25 High voltage current plug

ATTENTION

Faulty power supply!

Damage.

➔ Make sure that the mains voltage of the socket corresponds to the nominal voltage of the device.

➔ For detailed information see 1.2 Technical Specifications.

➔ Plug the high voltage current plug **25** into the power socket.

3.3.2 Fill the storage tank and hot water module

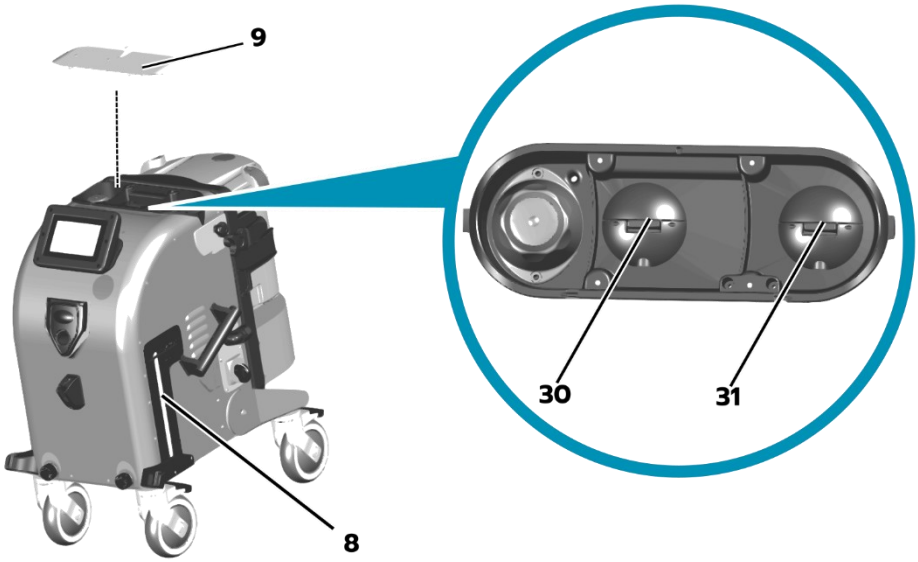

Figure 3.3-2 Filling the storage tank and hot water module

8	Filling level indicator	**30**	Hot water module
9	Filling openings cover	**31**	Storage tank

3.3.2.1 Fill storage tank

ATTENTION

Filling medium not allowed!

Damage to device!

➔ Only use tap water.

➔ Open the cover of the filling openings **9**.
➔ Remove the storage tank cap **31**.
➔ Fill with tap water.
➔ Attach the storage tank cap **31**.
➔ Close the cover of the filling openings **9**.

3.3.2.2 Fill hot water module

ATTENTION

Filling medium not allowed!

Damage to device!

➔ Use tap water.

If tap water is very calcareous:

➔ Use pre-filter for decarbonisation.

© Copyright by beam

beam GmbH recommends:

– Brita filter cartridge

➔ Order a pre-filter at https://www.dampfsauger-beam.de/startseite/.

➔ Open the cover of the filling openings **9**

➔ Remove the cap for the hot water module **30**.

➔ Fill with water.

➔ Attach the closure for the hot water module **30**.

➔ Close the cover of the filling openings **9**.

3.3.3 Filter tank

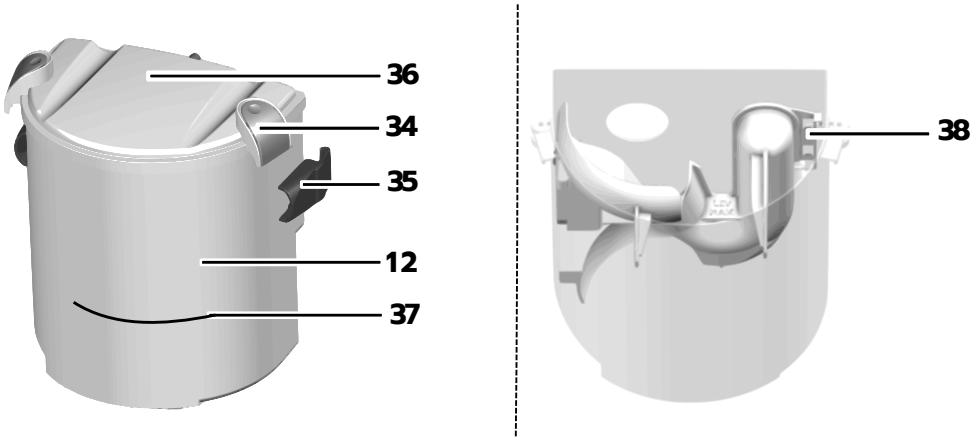

Figure 3.3-3 Filter tank

12	Filter tank	**36**	Filter cover
34	Filter cover lock (both sides)	**37**	Level mark
35	Filter tank lock (both sides)	**38**	Siphon

Filter tank 12 contains water filtration system:

– Water filter binds sucked dirt.

– Water filter binds dirt from sucked air.

– Water filter requires about 2 litres of water.

The intake volume of the filter tank 12 is made up as follows:

Name	Unit	Value (including tolerance)
Total intake volume	Litre	4
Intake volume of the filter area up to the filling level mark **37**	Litre	2
Dirt area intake volume	Litre	2

Table 3.3–1 Intake volume

INFO

Monitoring of the filling level in the filter tank

Unit stops when level in filter tank exceeds allowable level.
Display shows error message.

3.3.3.1 Remove filter tank

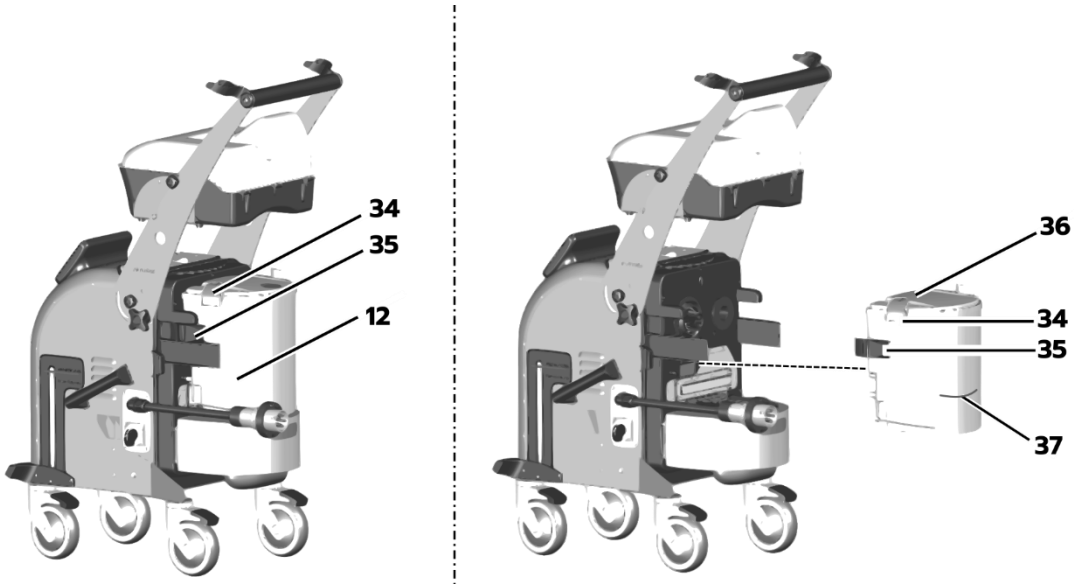

Figure 3.3-4 Remove filter tank

12	Filter tank	**36**	Filter cover
34	Filter cover lock (both sides)	**37**	Level mark
35	Filter tank lock (both sides)		

➔ Release and unhook the filter tank locks **35** on both sides.
➔ Remove filter tank **12** to the rear.

3.3.3.2 Remove filter cover

➔ Release the filter cover locks **34** and unhook them.
➔ Remove filter cover **36** upwards.

3.3.3.3 Fill filter tank

INFO

If only liquid is sucked up:

➔ Use filter tank unfilled.
⇨ Intake volume increases to around 4 litres.

➔ Make sure siphon **38** is properly installed.
➔ Fill the filter tank **12** with water up to the level mark **37**.
➔ Install filter cover **36** on filter tank **12**.
➔ Close the locks of the filter cover **34**.

© Copyright by beam

3.3.3.4 Insert filter tank

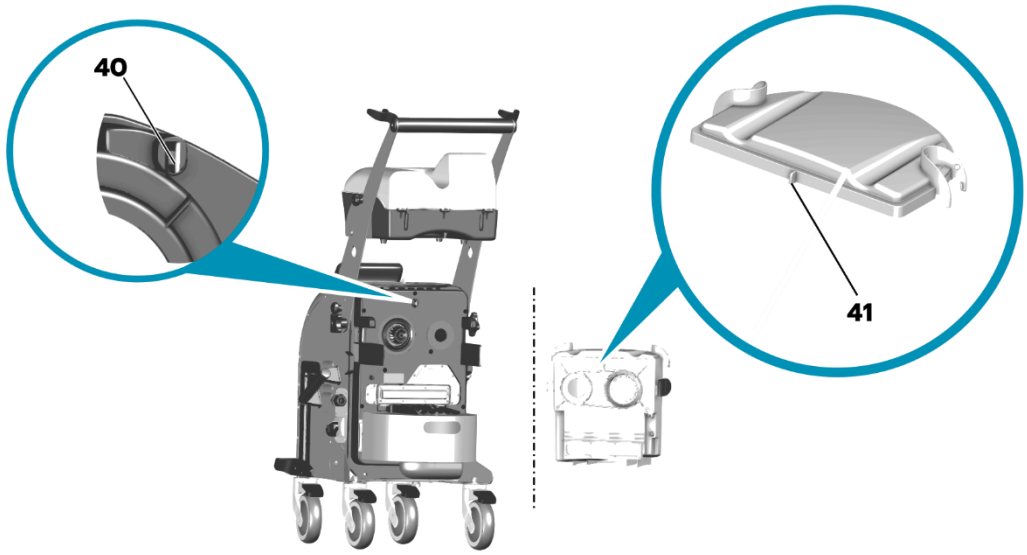

Figure 3.3-5 Insert filter tank

40	Control nut	**41**	Control bar

➔ Make sure siphon **38** is properly installed.
➔ Insert filter tank **12** on the device.
➔ Make sure that the control bar **41** has entered the control groove **40**.
➔ Close the filter tank lock **35**.
⇨ Filter tank **12** is inserted.

3.3.4 Steam and suction hose

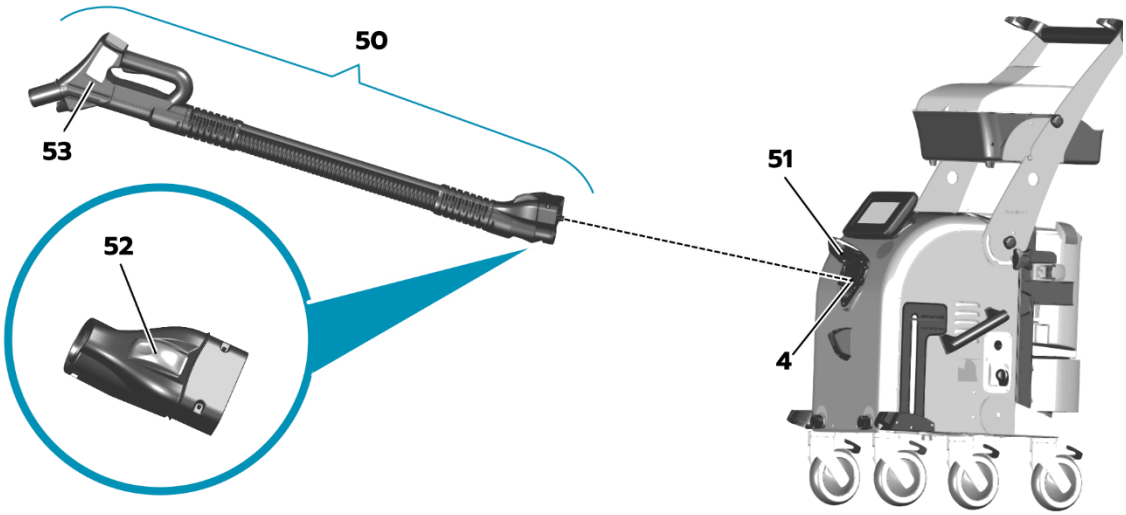

Figure 3.3-6 Steam and suction hose

4	Hose connection	**52**	Unlocking button

50 Steam and suction hose
51 Cover
53 Hand control unit

3.3.4.1 Connect steam and suction hose

➔ Open cover **51** and keep it open.
➔ Insert steam and suction hose **50** into hose connection **4** and snap into place.
➔ Ensure that the steam and suction hose **50** is engaged.
⇨ Steam and suction hose **50** is connected.

3.3.4.2 Remove steam and suction hose

➔ Press and hold the release button **52**.
➔ Detach steam and suction hose **50**.
⇨ Steam and suction hose **50** is removed.

3.3.5 Accessories

ATTENTION

Sensitive surfaces!

Damage.

➔ Ensure that the amount of steam, water and accessories are adjusted to the surface to be cleaned.

INFO

Spare parts and accessories.

➔ Order spare parts and accessories in the online shop.
➔ See https://www.dampfsauger-beam.de/startseite/

INFO

Maintenance and Care.

To ensure function and long service life, observe the following points:

➔ Check accessories regularly to ensure they are in perfect condition.
➔ Easier to change accessories: Wet plug connections with a suitable lubricant or silicone agent.

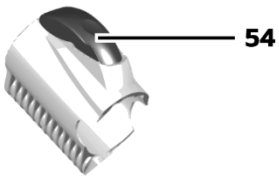

Figure 3.3-7 Unlocking button

54 Unlocking button

© Copyright by beam

Insert accessories:

➔ Insert accessories professionally.
➔ Make sure release button **54** is locked in place.

Remove accessories:

➔ Press and hold the release button **54**.
➔ Remove accessories.

3.3.5.1 Accessories on hand control unit

The following accessories can be attached directly to hand control unit 53:

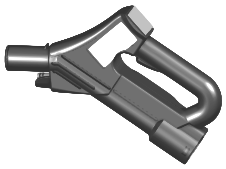

- Extension tube
- Extraction nozzle wide
- Extraction nozzle narrow
- Adapter with floor nozzle
- Point jet nozzle

Attachment	Name	Field of use
	Extension tube (double extension possible)	Extension between hand control unit and selectable attachments
	Extraction nozzle wide without attachment	– Pad – Mattresses – Carpets
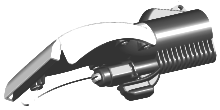	Extraction nozzle narrow without attachment	– Pad, – Mattresses – Carpets – Car seats – Vehicle interior cleaning – Foot mats
	Adapter for floor nozzle	Connects hand control to floor nozzle or extension tube to floor nozzle ➔ Make sure that the lock on the adapter is closed after plugging it in.
	Floor nozzle	**Requires one of the following missions:** – Use rubber lip – Use brush – Use rubber lip with brush ➔ See 3.3.5.4 Accessories on floor nozzle. ➔ Make sure the adapter is plugged in.

Attachment	Name	Field of use
	Point jet nozzle	**Spot jet nozzle can be combined with the following attachments:** – Round brush set small – Round brush large – Corner brush – Crevice nozzle narrow ➔ See 3.3.5.5 Accessories on point jet nozzle.

Table 3.3–2 Accessories on hand control

3.3.5.2 Accessories on extraction nozzle wide

ATTENTION

Sensitive parquet floors and laminate floors!

Damage.

If rubber lip attachment is used:

➔ Select MIN steam setting.
➔ Make sure hot water module is disabled.
➔ Only use the brush attachment on non-sensitive surfaces.

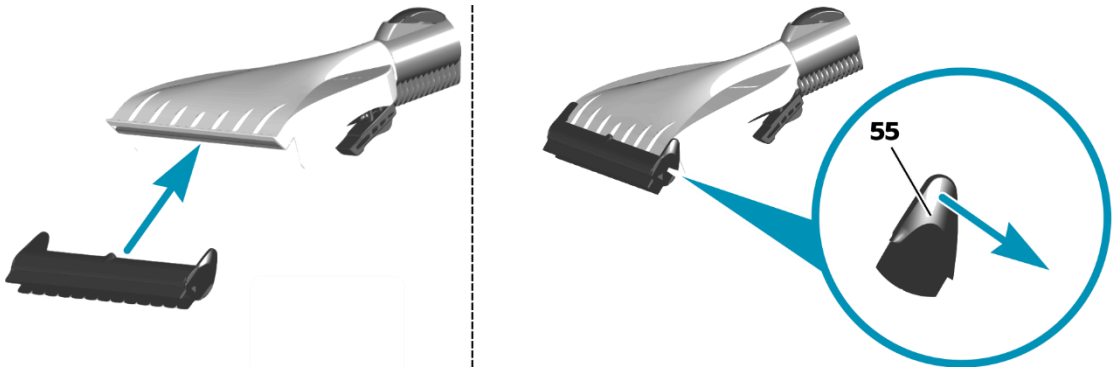

Figure 3.3-8 Use attachment

55 Bracket (both sides)

Attach attachment:

➔ Attach the attachment to the extraction nozzle as shown.
➔ Make sure tabs **55** on extraction nozzle are snapped into place.

Remove attachment:

➔ Unlock tabs **55** and remove attachment.

The following accessories can be attached directly to the extraction nozzle:

– Silicone lip with brush attachment
– Rubber lip attachment
– Brush attachment

© Copyright by beam

Attachment	Name	Field of use
	Silicone lip with brush attachment	– Glass surfaces – Store window – Window – Mirror
	Rubber lip attachment	**Hard floors like:** – Tiles, granite, marble – Wooden floors – PVC – Laminate
	Brush attachment	**Pre-cleaning of heavily soiled surfaces such as:** – Rubber floor mats – Plastic floor mats

Table 3.3–3 Accessories on extraction nozzle wide

3.3.5.3 Accessory on extraction nozzle narrow

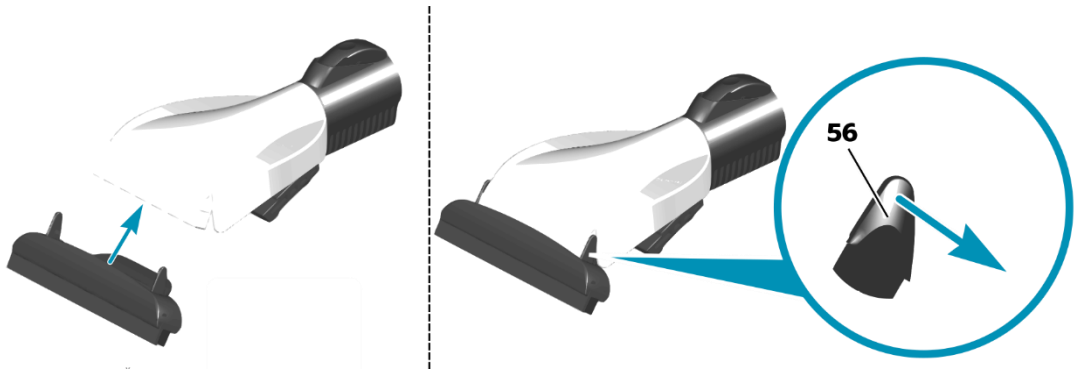

Figure 3.3-9 Use attachment

56 Bracket (both sides)

Attach attachment:

➔ Attach the attachment to the extraction nozzle as shown.
➔ Make sure tabs **56** on extraction nozzle are snapped into place.

Remove attachment:

➔ Unlock tabs **56** and remove attachment.

The following accessories can be attached directly to the narrow extraction nozzle:

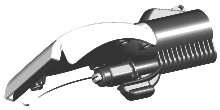

– Silicone lip with brush attachment
– Rubber lip attachment
– Nylon brush attachment

Attachment	Name	Field of use
	Silicone lip with brush attachment	– Glass surfaces – Window – Mirror
	Rubber lip attachment	**Almost all surfaces such as:** – Window frames, window sills – Room doors – Kitchen cabinets – Plastic parts
	Nylon brush attachment	**Pre-cleaning of heavily soiled surfaces such as:** – Rubber floor mats – Plastic floor mats – Window rubber

Table 3.3–4 Accessories on extraction narrow nozzle

3.3.5.4 Accessories on floor nozzle

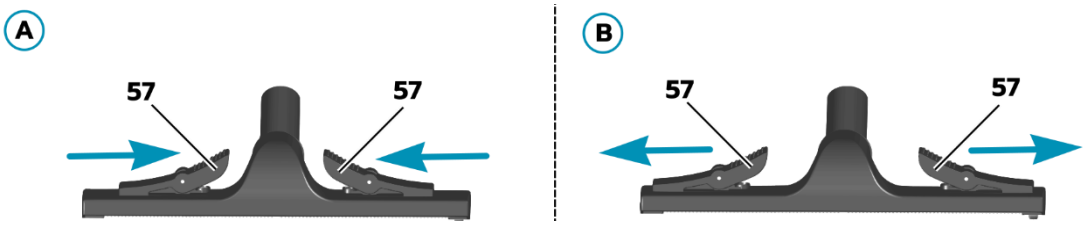

Figure 3.3-10 Open and close the attachment

57 Skid
A Closed
B Open

Open lock:

➔ Skid **57** outwards on both sides into open position **B**.

Close lock:

➔ Skid **57** inwards on both sides into closed position **A**.

© Copyright by beam

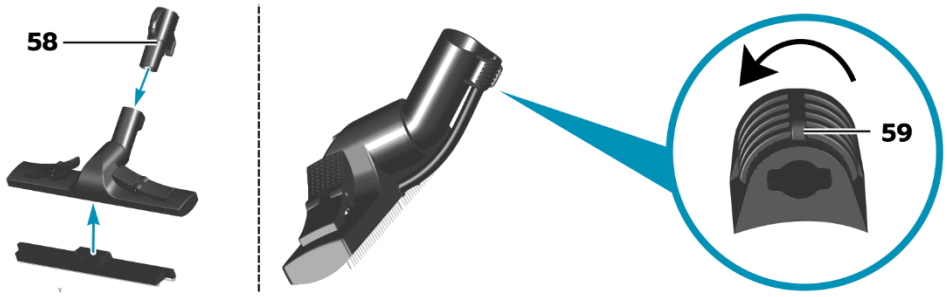

Picture 3.3-11 Attachment and adapter

58 Adapter **59** Locking sleeve

Attach adapter and attachment:

➔ Insert adapter **58** into the floor nozzle properly.
➔ Turn locking sleeve **59** 90 degrees clockwise.
⇨ Adapter **58** is locked.
➔ Open lock: See Figure 3.3-10 Open and close the attachment.
➔ Attach the attachment professionally.
➔ Close lock: See Figure 3.3-10 Open and close the attachment.

Remove adapter and attachment:

➔ Turn the locking sleeve **59** 90 degrees counterclockwise.
⇨ Adapter **58** is unlocked.
➔ Remove adapter **58**.
➔ Open lock: See Figure 3.3-10 Open and close the attachment.
➔ Remove attachment properly.

The following accessories can be attached directly to the floor nozzle:

– Rubber lip attachment
– Brush attachment
– Glide attachment

Attachment	Name	Field of use
	Rubber lip attachment	**Hard floors like:** – Tiles, granite, marble – Gastro or industrial floors – Wooden floors – PVC – Laminate
	Brush attachment	**Pre-cleaning of heavily soiled surfaces such as:** – Rubber mats – Plastic mats – Foot mats

Attachment	Name	Field of use
	Glide attachment	– Carpeted floors – Mats – Vacuum dry

Table 3.3–5 Accessories on floor nozzle

3.3.5.5 Accessories on point jet nozzle

ATTENTION

Sensitive surfaces!

Damage.

➔ Only use round brushes and corner brushes on non-sensitive materials.

➔ Ensure that use on glass surfaces is excluded.

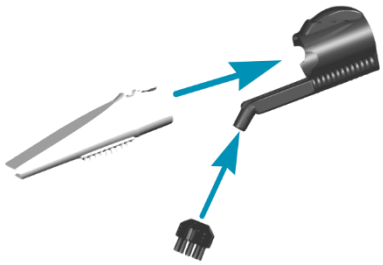

Figure 3.3-12 Use attachment

Attach attachment:

➔ Attach the attachment to the point jet nozzle as shown in the illustration.

Remove attachment:

➔ Pull off the attachment.

The following accessories can be attached directly to the point jet nozzle:

© Copyright by beam

- Round brush
- Corner brush
- Crevice nozzle with silicone attachment

Attachment	Name	Field of use
	Round brush set small	– Improvement in cleaning of stubborn dirt
	Round brush	– Improvement in cleaning of stubborn dirt
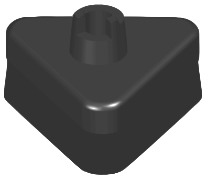	Corner brush	– Improvement in cleaning of stubborn dirt – Hard-to-reach corners
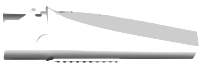	Crevice nozzle narrow with silicone attachment	– Spot suction – Vacuum dry

Table 3.3–6 Accessories on point jet nozzle

3.4 Operation

ATTENTION

Sensitive materials!

Damage.

➔ Before working with the steam function, ensure that the following materials are tested for compatibility on a hidden area:
- Silicone
- Adhesive
- Waxed surfaces
- Polished surfaces
- Lacquered surfaces
- Leather
- Alcantara
- Velour

➔ Only start with the lowest functional level.
➔ Preheat cold glass surfaces at a distance of 30 cm.

3.4.1 Turn on the device

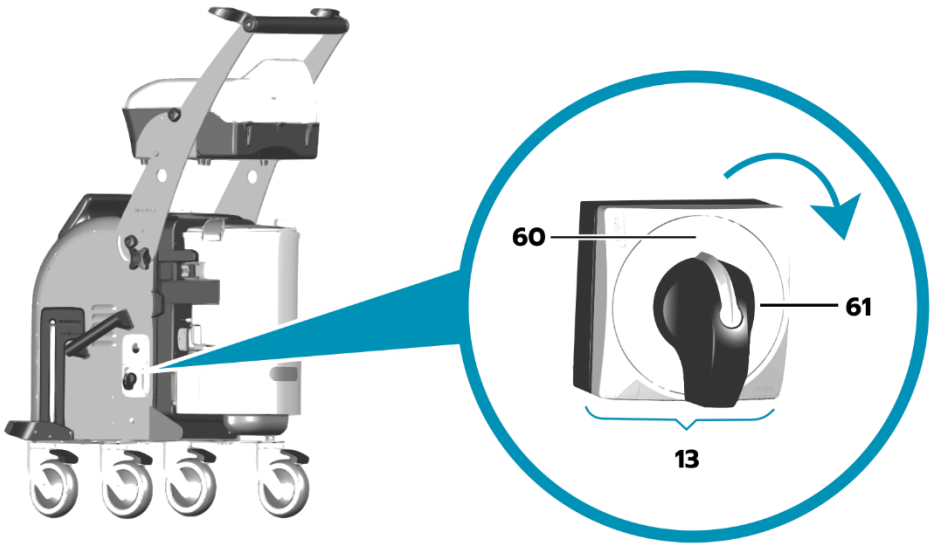

Figure 3.4-1 Switch on the device

13	Main switch	**61**	Switch position ON
60	Switch position OFF		

Ensure that the following requirements are met:
- Power supply is established
- Steam and suction hose is connected

➔ Set the main switch **13** to the ON position **61**.

© Copyright by beam

3.4.2 Display

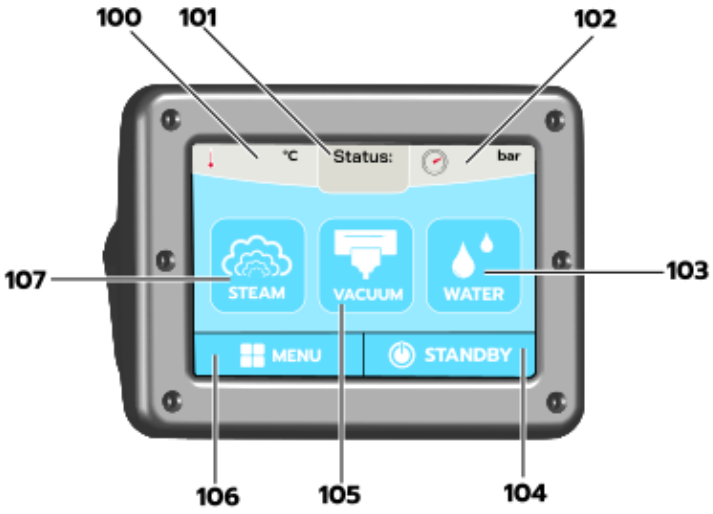

Figure 3.4-2 Display

100	Display temperature	**104**	OFF button
101	Status display	**105**	Suction button
102	Pressure gauge	**106**	Menu button
103	Extract button	**107**	Steam button

INFO

Factory setting.

Display switches to energy-saving mode after 60 seconds of inactivity.

3.4.2.1 Overview display

Position	Name of the item	Function
100	Display temperature	Shows current operating temperature in °C.
101	Status display	Shows current status. **The following statuses are shown individually:** – Heating – Error
102	Pressure gauge	Shows current operating pressure in bar.
103	Extract button	Enables / disables hot water module. **The following statuses are shown individually:** – ON – OFF – Ready
104	OFF button	Switches the device to standby mode.
105	Suction button	Activates / deactivates the suction function.
106	Menu button	Opens the user menu.
107	Steam button	Activates / deactivates the steam function.

Table 3.4–1 Overview display

3.4.3 Functions

INFO

Individual functions and function combinations

The suction function can be used as an individual function.
The steam function can be used as a single function.
The hot water and steam functions can be used at the same time.
The suction and steam functions can be used at the same time.
The suction, hot water and steam functions can be used at the same time.

➔ Select function and combination according to application.

3.4.4 Activate the steam function

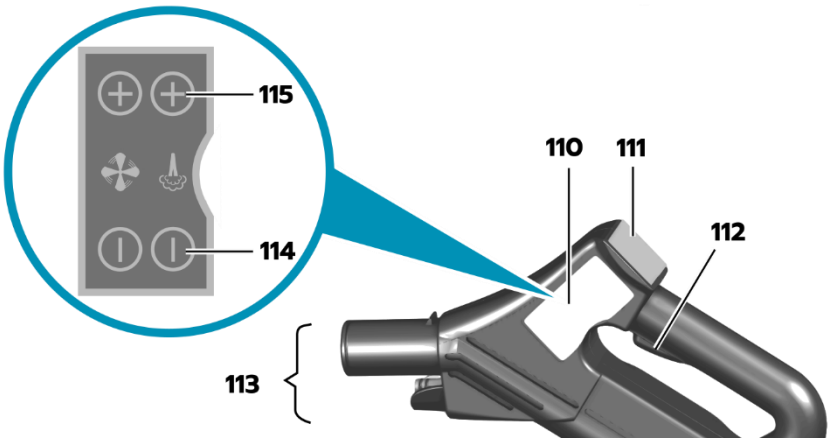

Figure 3.4-3 Activate the steam function

110	Performance of panel	**113**	Connection accessories
111	Control panel function	**114**	Decrease amount of steam button
112	Trigger lever	**115**	Increase steam volume button

CAUTION

Escaping hot steam!

Injuries.

➔ Ensure that people and animals are protected from the steam jet.

INFO

Manufacturer's recommendation.

Drops of water escaping after the first heating-up phase.

➔ Direct steam onto suitable collection medium until steam flow is even.

Ensure that the following requirements are met:

- Storage tank **31** is full

© Copyright by beam

- Device is switched on.
- Steam and suction hose **50** is plugged in.

When device is in standby mode:

➔ Press the button in the middle of the display.
  ⇨ Standby mode is ended.
  ⇨ Device is ready for operation.

➔ Press the steam button **107**.
  ⇨ Device heats up.
  ⇨ Steam button **107** lights up.
  ⇨ Display temperature **100** shows current value.
  ⇨ Display status **101** shows heating status.
  ⇨ Steam button **107** flashes until the operating temperature is reached.

➔ Test sensitive materials on an small or hidden area.

➔ Press trigger lever **112**.
  ⇨ Steam escapes from connected accessories.

➔ Stop steam outlet: Release the trigger lever **112**.

Change amount of steam:

➔ Press and hold down the steam button **107**.
or

➔ Press the button to reduce the amount of steam **114** or the button to increase the amount of steam **115** as required.

The amount of steam is shown on the display as follows:

Figure 3.4-4 Set the amount of steam

MIN	Small amount of steam	**MAX**	Large amount of steam
MED	Medium amount of steam		

3.4.4.1 Deactivate the steam function

➔ Press the steam button **107**.
  ⇨ Steam button **107** goes out.

3.4.5 Activate the hot water function

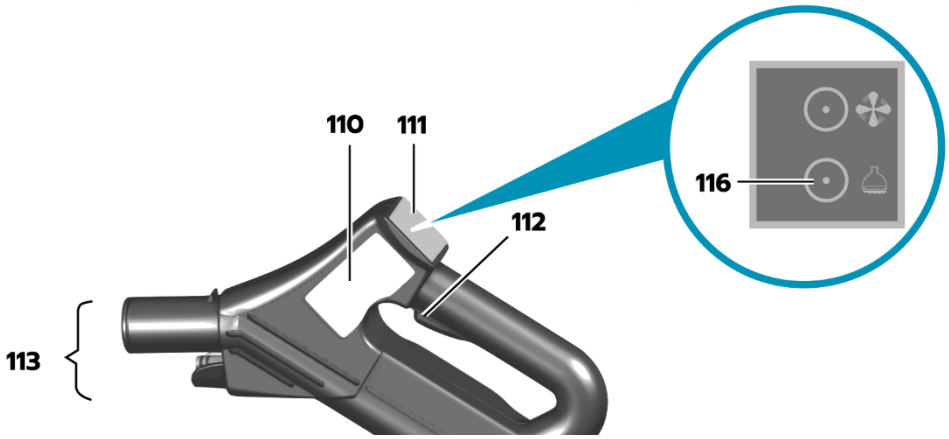

Figure 3.4-5 Activate the hot water function

110	Performance of panel	**113**	Connection accessories
111	Control panel function	**116**	Hot water button
112	Trigger lever		

ATTENTION

Sensitive materials!

Property damage.

➔ Only use hot water on non-sensitive materials.

INFO

Heavy contamination.

The flushing effect of the hot water with steam increases the cleaning performance.

Ensure that the following requirements are met:

- Device is switched on.
- Hot water module **30** is filled.
- Steam and suction hose **50** is plugged in.

When device is in standby mode:

➔ Press the button in the middle of the display.
  ⇨ Standby mode is ended.
  ⇨ Device is ready for operation.

➔ Test materials to be cleaned in a small or hidden area.

➔ Press the hot water button **116** on the hand control unit.
  ⇨ Extract button **103** on the display lights up.

➔ Press trigger lever **112**.
  ⇨ Hot water escapes from connected accessories.

➔ Stop hot water outlet: Release the trigger lever **112**.

© Copyright by beam

Change flow rate:

➔ Press and hold Extract button **103** on the display.

The flow rate is shown on the display as follows:

Figure 3.4-6 Set flow rate

MIN	Small flow rate	**MAX**	Large flow rate
MED	Medium flow rate		

3.4.5.1 Deactivate the hot water function

➔ Press the hot water button **116**.

3.4.6 Activate the suction function

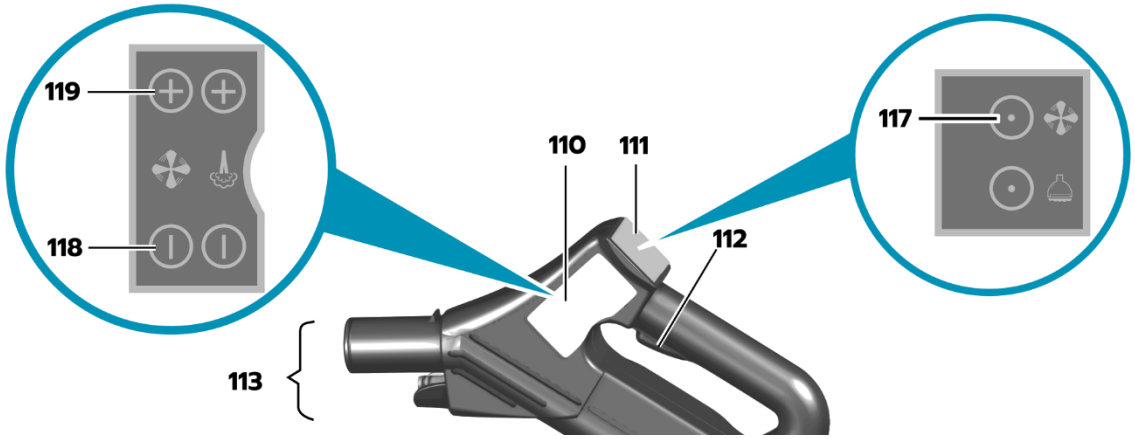

Figure 3.4-7 Activate the suction function

110	Performance of panel	**117**	Suction button
111	Control panel function	**118**	Decrease suction power button
112	Trigger lever	**119**	Increase suction power button
113	Connection accessories		

ATTENTION

Filling level in the filter tank not allowed!

Damage to the device.

If vacuuming dry, carry out the following action:

➔ Ensure that filter tank **12** is properly filled up to level **37**.

INFO

Heavy foam formation.

If the sucked-up medium foams a lot:

➔ Add foam reducing agent to filter tank **12**.

➔ Observe the manufacturer's information.

Ensure that the following requirements are met:

- Device is switched on.
- Filter tank **12** is inserted.
- Steam and suction hose **50** is plugged in.
- Press the button in the middle of the display.
  - ⇨ Standby mode is ended.
  - ⇨ Device is ready for operation.

➔ Press the suction function button **117** on the hand control unit.

⇨ The device vacuums.

Change suction power:

➔ Press and hold the suction button **105**.

or

➔ Press button to reduce suction power **118** or button to increase suction power **119** as required.

Suction power is shown on the display as follows:

Figure 3.4-8 Set the suction power

MIN	Small suction power	**MAX**	High suction power
MED	Medium suction power		

3.4.6.1 Deactivate suction function

INFO

Residual liquid in the suction line.

➔ Leave the suction function activated for around 30 seconds after the suction process is complete.

⇨ Residual liquid is sucked into filter tank **12**.

© Copyright by beam

➔ Ensure that the residual liquid in the suction line has been sucked out.
➔ Press the suction function button **117**.
⇨ Device stops suction process.

3.5 Decommissioning

3.5.1 Prepare for decommissioning

➔ Empty filter tank **12**.
➔ Insert the empty filter tank **12**.
➔ See 3.3.3.4 Insert filter tank.

3.5.2 Clean attachments

3.5.2.1 Clean steam and suction hose and accessories

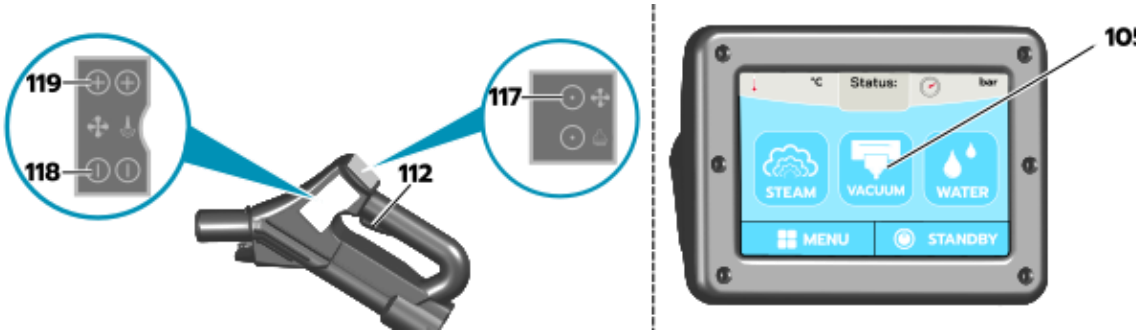

Figure 3.5-1 Clean the steam and suction hose and accessories

105	Suction button	**118**	Decrease suction power button
112	Trigger lever	**119**	Increase suction power button
117	Suction button		

INFO

Heavy foam formation.

If the rinsing process foams a lot:

➔ Repeat the rinsing process with clear water.

Ensure that the following requirements are met:

- Filter tank **12** is empty.
- Detergent is prepared.

INFO

Cleaning the steam and suction hose and accessories with detergent.

➔ Use 2 litres of mildly alkaline detergent.

INFO

Cleaning the steam and suction hose and accessories with disinfectant.

➔ Use VAH-listed surface disinfectants based on peroxides.
➔ Follow the exposure times specified by the manufacturer.

Set suction power:

➔ Press Suction button **105** on the display and hold it down until MIN suction power is displayed.
or
➔ Press button to reduce suction power **118** or button to increase suction power **119** until MIN is shown on the display.
➔ Press the suction function button **117** on the hand control unit.
⇨ The device vacuums.
➔ Suck cleaning agents or disinfectants completely with used accessories and the steam and suction hose.
⇨ The steam and suction hose and accessories have been cleaned.
➔ Deactivate suction function.
➔ See 3.4.6.1 Deactivate suction function.
➔ Turn off the device.
➔ Disconnect power supply.
➔ Empty the filter tank **12**.
➔ Remove accessories and let dry.
➔ Unplug the steam and suction hose and let them dry.
➔ See 3.3.4.2 Remove steam and suction hose.

3.5.2.2 Clean the filter tank

Ensure that the following requirements are met:

- Filter tank **12** is removed
- Filter tank **12** is empty

➔ Remove filter cover **36**.
➔ Remove siphon **38** from filter tank **12**.
➔ Clean siphon **38** and filter tank **12** properly.
➔ Insert siphon **38** in filter tank **12**.
➔ Leave filter tank **12** dry with the filter cover **36** open.

3.5.3 Storage

INFO

Storage.

➔ Ensure filter cap **36** on filter tank **12** is removed.
➔ Ensure that the storage location is frost-free and adequately ventilated.

© Copyright by beam

3.6 Malfunctions

3.6.1 Error codes on display

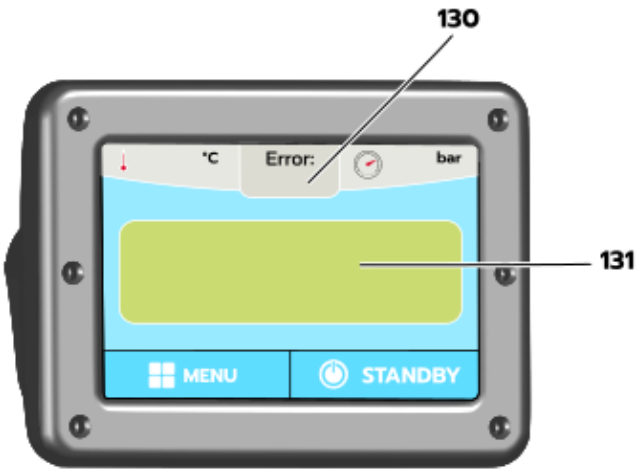

Figure 3.6-1 Error codes on display

130 Error code display

131 Troubleshooting indicator

Error code **130** display shows the error code that has occurred.
Troubleshooting indicator **131** displays troubleshooting actions.

➔ Press Troubleshooting indicator **131** on display for more information.
  ⇨ Additional troubleshooting instructions are shown on the display.

➔ Follow instructions on display.

3.6.1.1 Error codes

Error code	Acoustic warning signal	Description	Troubleshooting
E001	Yes	Water level in storage tank **31** too low.	➔ Fill up storage tank **31**. ➔ See 3.3.2.1 Fill storage tank.
E002	Yes	Water level below hot water module **30**.	➔ Top up hot water module **30**. ➔ See 3.3.2.2 Fill hot water module.
E004	Yes	Level in filter tank **12** too high.	➔ Empty the filter tank **12**. ➔ See 3.3.3 Filter tank. If filter tank **12** is heavily soiled: ➔ Clean filter tank **12** .

Table 3.6–1 Error Codes

3.6.2 Malfunctions

Error image	Possible Cause	Troubleshooting
Unit produces little or no steam. The appliance produces little hot water or no hot water.	Hot water module **30** is calcified.	➔ Descale hot water module **30**. ➔ See 4.2 Hot water module.
Steam is very humid.	Hot water module **30** is active.	➔ Press the hot water button **116**. ➔ See 3.4.5.1 Deactivate the hot water function.
Hot water without function.	Hot water module **30** is disabled.	➔ Activate hot water module **30**. ➔ See 3.3.2.2 Fill hot water module.
	Storage tank **31** is empty.	➔ Fill storage tank **31**. ➔ See 3.3.2.1 Fill storage tank.
Vacuum without function	Filter tank **12** is installed incorrectly.	➔ Insert filter tank **12**. ➔ See 3.3.3.4 Insert filter tank.
Low suction or no suction	Foreign objects or dirt accumulation in the steam and suction hose or accessories.	➔ Clean steam and suction hose. ➔ Clean accessories. ➔ See 3.5.2 Clean attachments.
Device stops	Error code has occurred.	➔ See 3.6.1.1 Error codes. ➔ Follow instructions.

Table 3.6–2 Malfunctions

3.6.3 Safety precautions

WARNING

Improper use!

Risk of death.

➔ Ensure that the device is used in compliance with the user manual.
➔ Ensure that the intended use and safety chapters are followed.

INFO

The following situations relate exclusively to safety precautions when the device is active.
The following safety precautions relate exclusively to the device in this user manual.
Safety precautions are automatically activated when appropriate situations arise.

© Copyright by beam

Situation when the device is active	Safety precaution	Remedial action
– Filter tank **12** is removed. – Filter tank **12** becomes loose due to improper locking.	**The following safety precautions are active:** – Contact switch is contactless. – Suction function stops. – UVC lamp goes out.	➔ Insert filter tank **12** properly. ➔ See 3.3.3.4 Insert filter tank.
– Steam and suction hose **50** is removed. – Steam and suction hose **50** comes loose due to improper locking.	**The following safety precautions are active:** – Contact switch is contactless. – Suction function stops. – Steam function stops. – Hot water function stops.	➔ Plug in the steam and suction hose **50** properly. ➔ See 3.3.4.1 Connect steam and suction hose.
– Power supply is interrupted. – Accidental unplugging – Power failure	**The following safety precautions are active:** – The device is in start mode after the power supply has been restored. – All functions are disabled.	➔ Select functions again.
Trigger **112** on manual control unit **53** is not pressed.	**The following safety precautions are active:** – Contact switch is contactless. – Steam function is locked.	➔ Press trigger lever **112**.
– Storage tank **31** is opened. – Hot water module **30** is opened.	Depressurised system ensures safe opening.	➔ Fill storage tank **31**. ➔ Fill hot water module **30**.

Table 3.6.3-1 Safety Precautions

4 Maintenance

4.1 Document maintenance

Activity		Date	Remark	Name of maintenance personnel
	Hot water module			
	Boiler			
	O-rings			
	Filter			
	Miscellaneous			
	Hot water module			
	Boiler			
	O-rings			
	Filter			
	Miscellaneous			
	Hot water module			
	Boiler			
	O-rings			
	Filter			
	Miscellaneous			
	Hot water module			
	Boiler			
	O-rings			
	Filter			
	Miscellaneous			
	Hot water module			
	Boiler			
	O-rings			
	Filter			
	Miscellaneous			
	Hot water module			
	Boiler			
	O-rings			
	Filter			
	Miscellaneous			

Table 4.1–1 Document maintenance

© Copyright by beam

4.2 Hot water module

INFO

Calcification caused by use.

➔ Prevent operational disruptions caused by limescale deposits: Descale the hot water module regularly.

4.2.1 Prepare hot water module for maintenance

4.2.1.1 Empty the hot water module

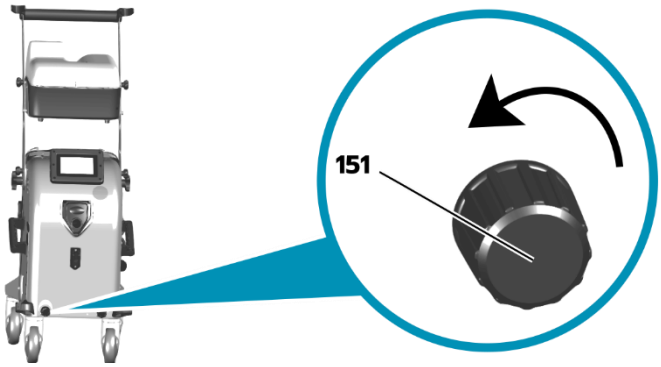

Figure 4.2-1 Empty the hot water module

151 Drain plug storage tank hot water module

Ensure that the following requirements are met:

- Power supply is disconnected.
- A suitable collection container is available.
- The collection container has a capacity of around 3 litres.

➔ Place a container under hot water drain plug **151** .

➔ Open the drain plug for hot water module storage tank **151** in an anti-clockwise direction and remove.

⇨ Hot water module empties itself.

When the hot water module is completely empty:

➔ Unscrew the drain plug for hot water module storage tank **151** and hand-tighten.

4.2.2 Rinse the hot water module

CAUTION

Improper use of descaler!

injuries and property damage.

➔ Ensure that the manufacturer's safety instructions are followed.

➔ Ensure that accidental drops on surface are removed immediately.

INFO

Location-dependent water hardness.

➔ Adjust the descaling interval according to the local water hardness.

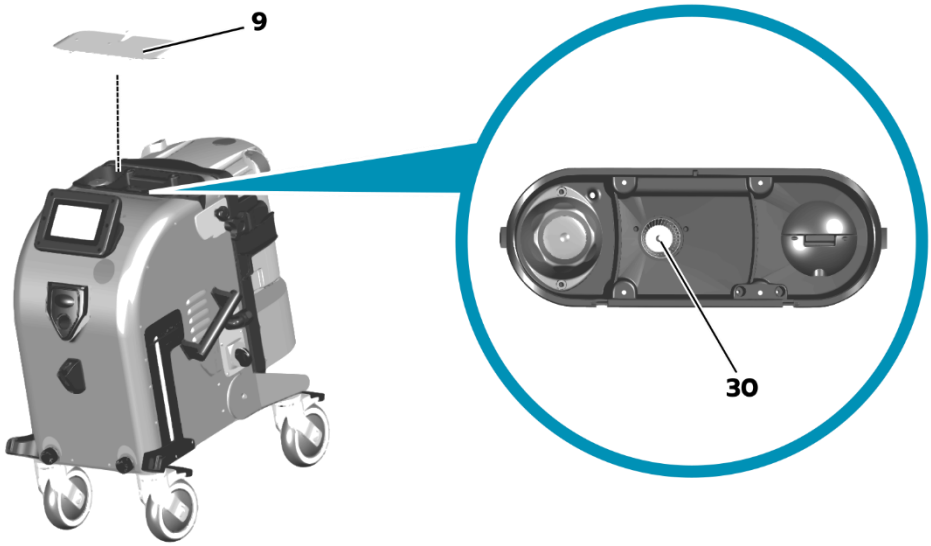

Figure 4.2-2 Rinse the hot water module

9	Filling openings cover	**30**	Hot water module

INFO

beam GmbH recommends:

durgol descaling agent

➔ Order descaler in the online shop.

➔ See https://www.dampfsauger-beam.de/startseite/

Ensure that the following requirements are met:

- Power supply is disconnected.
- Measuring cup ready.
- A suitable collection container is available.
- Vinegar essence or descaler is ready.
- Steam and suction hose **50** is connected.

➔ Mix 0.3 litres of vinegar essence or descaler with 0.3 litres of tap water in a measuring cup.

➔ Remove the cover for the filler openings **9**.

➔ Remove the cap on hot water module **30**.

➔ Pour the mixture from the measuring cup completely into hot water module **30**.

➔ Establish power supply.

➔ Turn on the device.

➔ Press Extract button **103** on Display. See 3.4.2.1 Overview display.

➔ Activate the hot water function. See 3.4.5 Activate the hot water function.

© Copyright by beam

➔ Squirt the complete mixture into a collection container.
➔ Repeat the process until no more lime comes out.
➔ Dissolve heavy limescale deposits: Increase exposure time.
  ⇨ Hot water module **30** has been descaled.
  ⇨ Steam and suction hose **50** has been descaled.
➔ Fill the hot water module **30** with 1 litre of tap water.
➔ Rinse the device: Splash the tap water completely into the collection container.
➔ Deactivate the hot water function. See 3.4.5.1 Deactivate the hot water function.
➔ Turn off the device.

4.3 Boiler

INFO

Calcification caused by use.

➔ Prevent operational disruptions caused by limescale deposits: Descale the boiler regularly.

If the steam output decreases or there are lime particles in the accessories:

➔ Prefer decalcification.

4.3.1 Prepare boiler maintenance

4.3.1.1 Empty storage tank

CAUTION

Hot water!

Scalds and injuries.

➔ Ensure the boiler has cooled down to below 50°C before descaling.

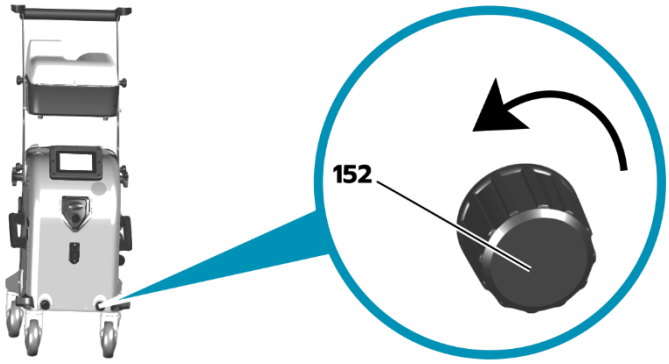

Figure 4.3-1 Empty storage tank

152 Drain plug storage tank

Ensure that the following requirements are met:
- Boiler temperature is below 50°C.
- Power supply is disconnected.
- A suitable collection container is available.
- The collection container has a capacity of around 3 litres.

➔ Place container under drain plug storage tank **152**.
➔ Open drain plug storage tank **152** anti-clockwise and remove.
⇨ Storage tank empties.

When the storage tank is completely empty:

➔ Unscrew the drain plug for the storage tank **152** and tighten by h and.

4.3.2 Descale the boiler

CAUTION
Chemical descaler and vinegar essence!
injuries and property damage.

➔ Ensure that the manufacturer's safety instructions are followed.
➔ Ensure that accidental drops on surface are removed immediately.

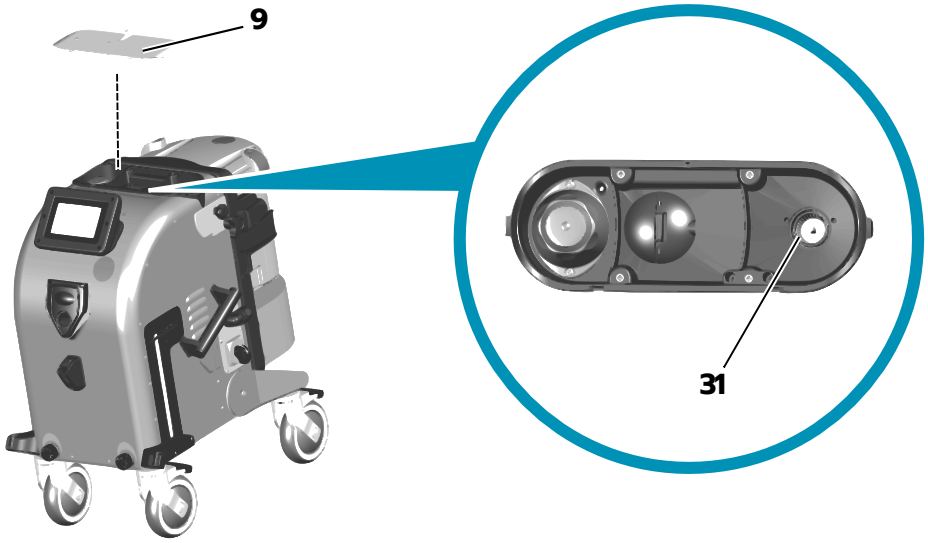

Figure 4.3-2 Fill in descaler

9	Filling openings cover	**31**	Storage tank

INFO
beam GmbH recommends:
durgol descaling agent
➔ Order descaler in the online shop.
➔ See https://www.dampfsauger-beam.de/startseite/

© Copyright by beam

4.3.2.1 Start cleaning the boiler

CAUTION

Cancellation of the cleaning programme!

injuries and property damage.

➔ Ensure that the power supply is permanently available during the cleaning process.

➔ Turn off the device only after performing the actions at 4.3.2.3 Rinse the boiler .

Ensure that the following requirements are met:

- Power supply is disconnected.
- Measuring cup ready.
- A suitable collection container is available.
- 1 litre descaler is ready.
- Steam and suction hose **50** is connected.

➔ Open the cover of the filling openings **9**.
➔ Remove sealing cap on storage tank **31**.
➔ Pour the descaler completely into storage tank **31**.
➔ Establish power supply.
➔ Turn on the device.
➔ Press the Menu button **106** on the display. See 3.4.2.1 Overview display.
➔ Press the maintenance button on the display.

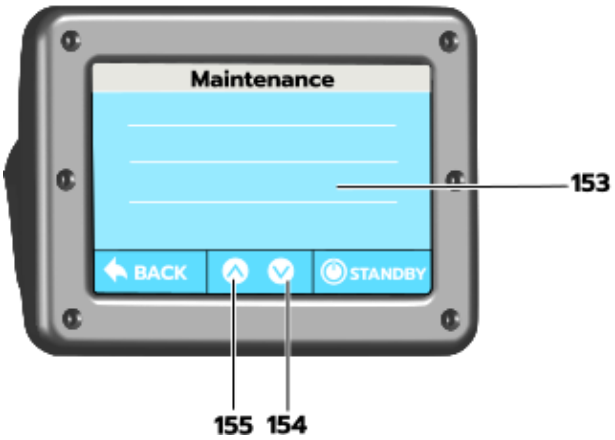

Figure 4.3-3 Select descaling programme

153	Programme selection	**155**	Up button
154	Down button		

➔ Press Down button **154** or top button **155** on the display until the *start descaling programme* is shown in programme selection **153**.
➔ Select *start descaling programme* at programme selection **153**.

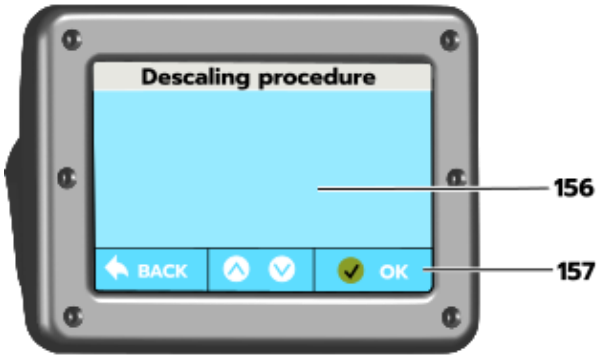

Figure 4.3-4 Start the descaling programme

156 Information field **157** OK button

➔ Ensure that note in information field **156** is followed.
➔ Ensure that the device is permanently switched on during the descaling programme.
➔ Start the descaling programme with the OK button **157** on the display.
  ⇨ Cleaning process starts.
  ⇨ The descaling programme runs for 20 minutes.
  ⇨ When the programme ends, an acoustic signal sounds.
  ⇨ Message E013 is shown on the display.
➔ Empty the boiler. 4.3.2.2 Empty the boiler.

4.3.2.2 Empty the boiler

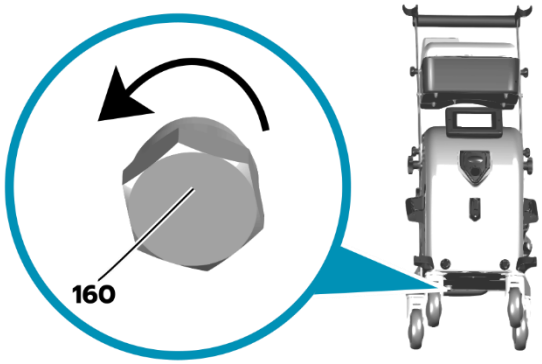

Figure 4.3-5 Empty the boiler

160 Boiler drain plug

Ensure that the following requirements are met:
- Boiler has cooled down.
- Device is switched on.
- A suitable collection container is available.
- A suitable tool for drain plug boiler **160** is available.

➔ Ensure that the device is permanently switched on during the descaling programme.
➔ Place a container under boiler drain plug **160** .
➔ Open boiler drain plug **160** anti-clockwise and remove.
  ⇨ Boiler empties itself.

© Copyright by beam

When the boiler is completely empty:

➔ Unscrew the drain plug for the boiler **160** and tighten properly.
➔ Empty storage tank **31**: See 4.3.1.1 Empty storage tank.
➔ Rinse the boiler. 4.3.2.3 Rinse the boiler.

4.3.2.3 Rinse the boiler

INFO

Insufficient level

If error message E001 appears in the display during the rinsing process, carry out the following procedure:

➔ Refill storage tank **31**: See 3.3.2.1 Fill storage tank.
  ⇨ Rinsing process continues automatically.

➔ Fill storage tank **31** with clear tap water: See 3.3.2.1 Fill storage tank.
➔ Press the OK button **157** on the display.
  ⇨ Rinsing process 1 starts.
  ⇨ Rinsing programme runs for 9 minutes
  ⇨ When the programme ends, an acoustic signal sounds.
  ⇨ Message E013 is shown on the display.
➔ Empty the boiler: See 4.3.2.2 Empty the boiler.
➔ Empty storage tank **31**: See 4.3.1.1 Empty storage tank.
  ⇨ Device is ready for rinsing process 2.
➔ Fill storage tank **31** with clear tap water: See 3.3.2.1 Fill storage tank.
➔ Press the OK button **157** on the display.
  ⇨ Rinsing process 2 starts.
  ⇨ Rinsing programme runs for 9 minutes
  ⇨ When the programme ends, an acoustic signal sounds.
  ⇨ Error message E013 is shown on the display.
➔ Empty the boiler: See 4.3.2.2 Empty the boiler.
➔ Empty storage tank **31**: See 4.3.1.1 Empty storage tank.
  ⇨ Boiler is descaled.

INFO

Commissioning after decalcification.

To restore the minimum water level in the boiler, carry out the following procedure:

➔ Fill storage tank **31**: See 3.3.2.1 Fill storage tank.
➔ Press the steam button **107** four times. See 3.4.2 Display.

4.4 Filters and o-rings

4.4.1 Maintenance of filters

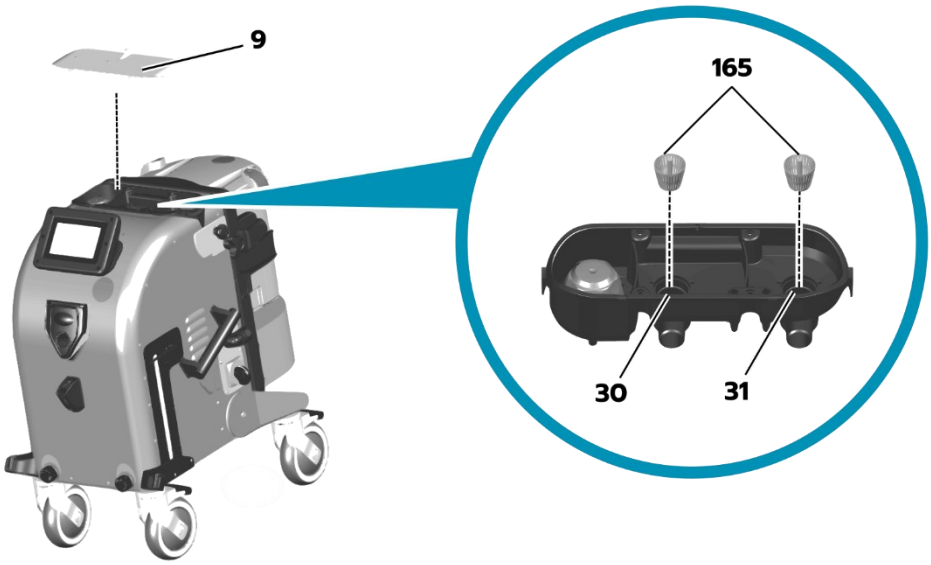

Figure 4.4-1 Maintenance of filters

9	Filling openings cover	**31**	Storage tank
30	Hot water module	**165**	Filter insert

INFO

Protection against foreign bodies.

Filter insert **165** protects hot water module **30** and storage tank **31** from foreign bodies falling in.

If the filter insert is dirty:

- ➔ Open the cover of the filling openings **9**
- ➔ Remove the closure for the hot water module **30** and the closure for storage tank **31**.
- ➔ Remove filter inserts **165**.
- ➔ Rinse filter inserts **165** under running water.
- ➔ Insert filter inserts **165** again.
- ➔ Close the cover of the filling openings **9**.

4.4.2 Maintenance of O-rings

INFO

Spare parts and accessories.

- ➔ Order spare parts and accessories in the online shop.
- ➔ See https://www.dampfsauger-beam.de/startseite/

© Copyright by beam

INFO

Maintenance and Care.

To ensure function and long service life, observe the following points:

➔ Check O-rings regularly to ensure they are in good condition.
➔ Make sure all O-rings are properly in place.
➔ Reduce wear: Wet the O-rings with a suitable lubricant or silicone agent.

4.4.2.1 Change O-rings on hand control unit

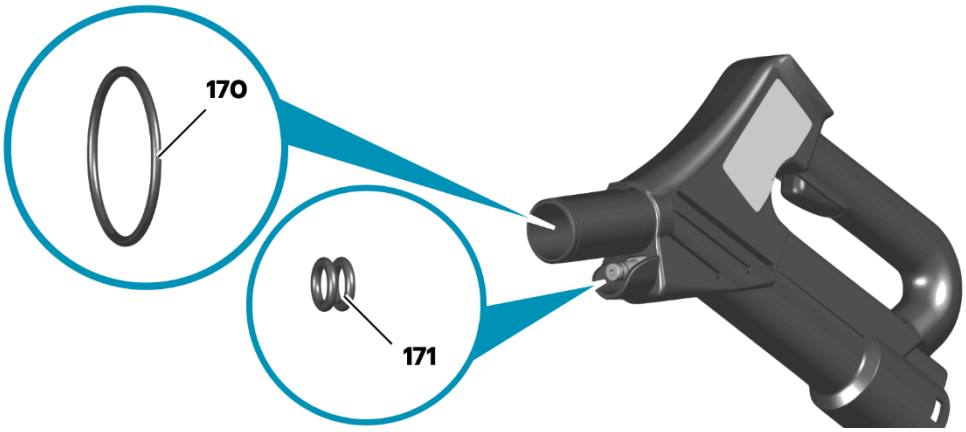

Figure 4.4-2 Changing the O-rings on the hand control unit

170	O-ring suction tube	**171**	O-rings nozzle tube (2x)

➔ Perform visual inspection.
➔ If necessary, replace the O-ring in suction tube **170**.
➔ If necessary, replace O-rings on nozzle tube **171**.

4.4.2.2 Change the O-rings on the suction and steam hose

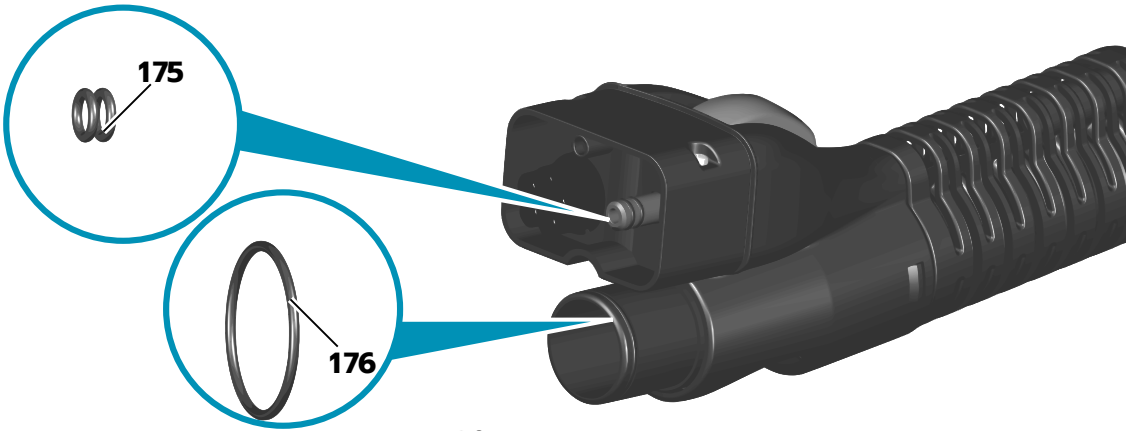

Figure 4.4-3 Change the O-rings on the suction and steam hose

175	O-rings nozzle tube (2x)	**176**	O-ring suction tube

➔ Perform visual inspection.
➔ If necessary, replace O-rings on nozzle tube **175**.

➔ If necessary, replace the O-ring in suction tube **176**.

4.4.2.3 Change O-rings on the extension tube

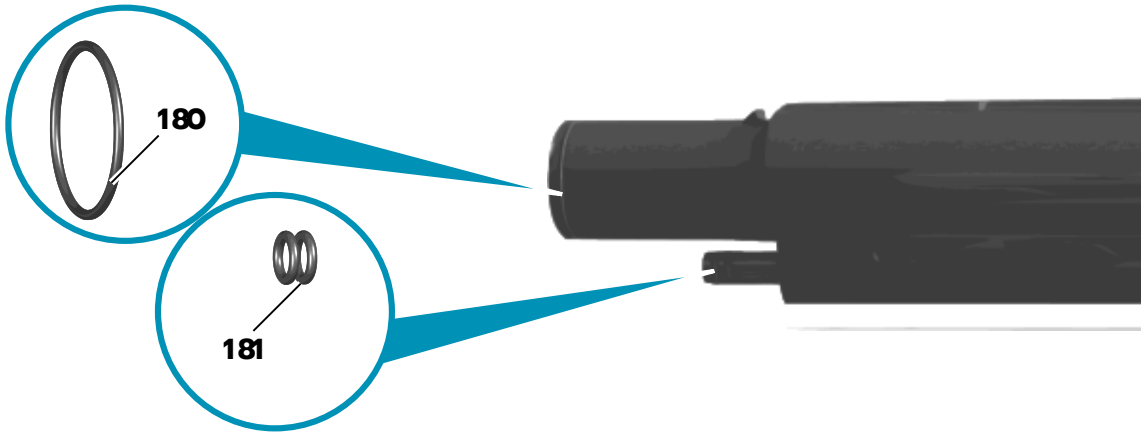

Figure 4.4-4 Changing the O-rings on the extension tube

180	O-ring suction tube	**181**	O-rings nozzle tube (2x)

➔ Perform visual inspection.
➔ If necessary, replace the O-ring in suction tube **180**.
➔ If necessary, replace O-rings on nozzle tube **181**.

© Copyright by beam

beam GmbH
Illertalstraße 3
89281 Altenstadt

verkauf@beam.de
+49 8337 74000

https://www.beam.de